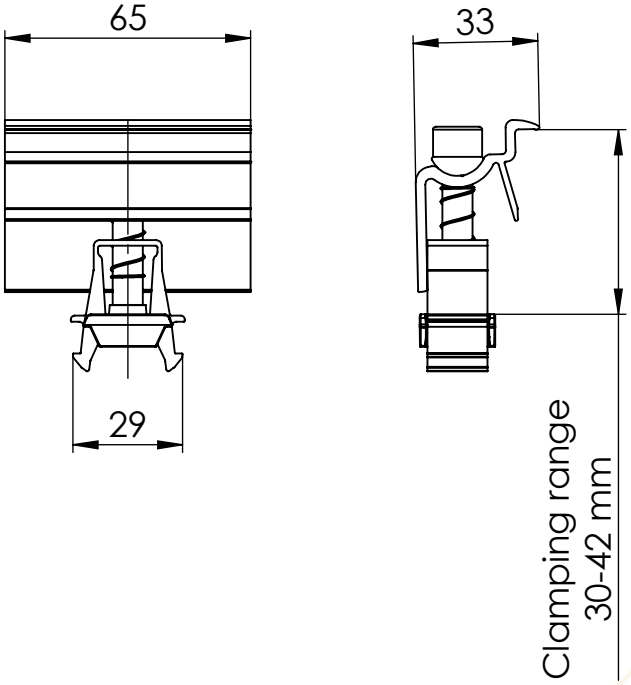

Explosion

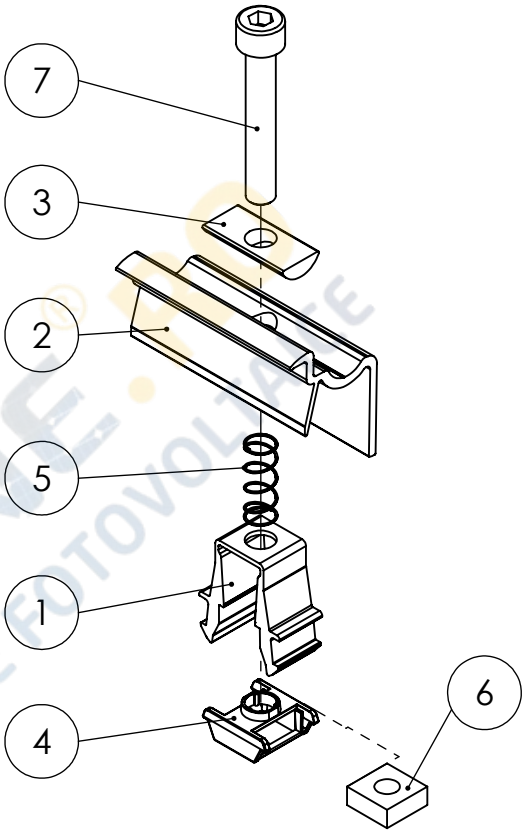

Pos.-No.	Item No.	Designation	Material	Quantity
1	2002480	Universal clamp OneStance Solo	EN AW 6063 T66	1
2	2002484	Universal clamp OneEnd SILVER Solo	EN AW 6063 T66	1
3	2002569	Semicircle bearing	EN AW 6063 T66	1
4	2002483	Plastic cage	POM/ black	1
5	1005696	MC-EC iron spring	1.4301	1
6	2002482	Square nut-similar DIN 557-M8-SW15-Gleitmo coated	1.4301	1
7	2002179	Socket head bolt serrated -EN ISO 4762-M8x50	A2-70	1

K2 Systems GmbH
Industriestr. 18
71272 Renningen
Germany
+49 7159 42059-0

Designation:

Data sheet OneEnd Set 30-42 mm

	Name	Date	Material:	Item no.:	
Designed	B. Koch	02.02.2017	see table	2002514	A4
Approved	E. Markou	18.07.2023	Surface: -	Drawing no.: 03-027-03	All dimensions in mm
Last change	A. Soumpalas	18.07.2023	Weight: ca. 89.0 g/pc Scale: 1:2		Sheet 1 of 1

This drawing is the sole property of K2 Systems GmbH. It is protected by copyright and may only be copied, reproduced or distributed to a third party with explicit permission!