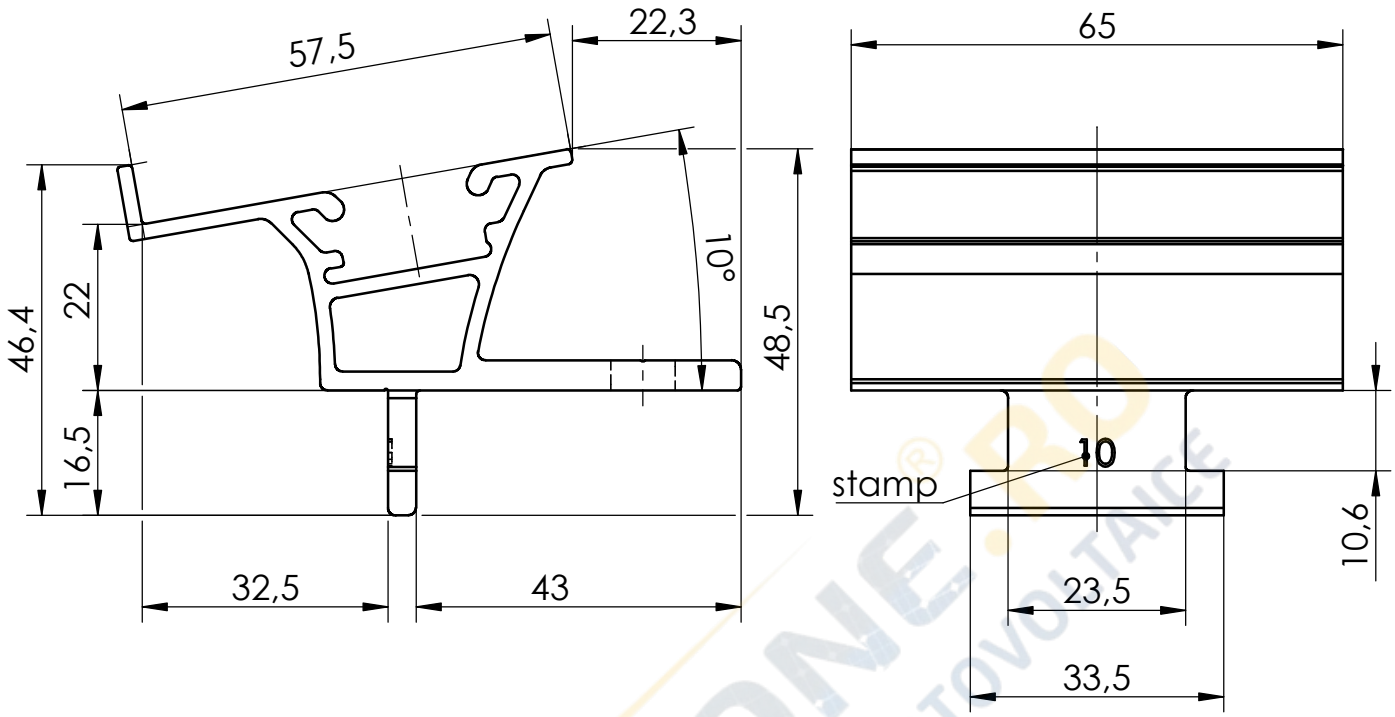

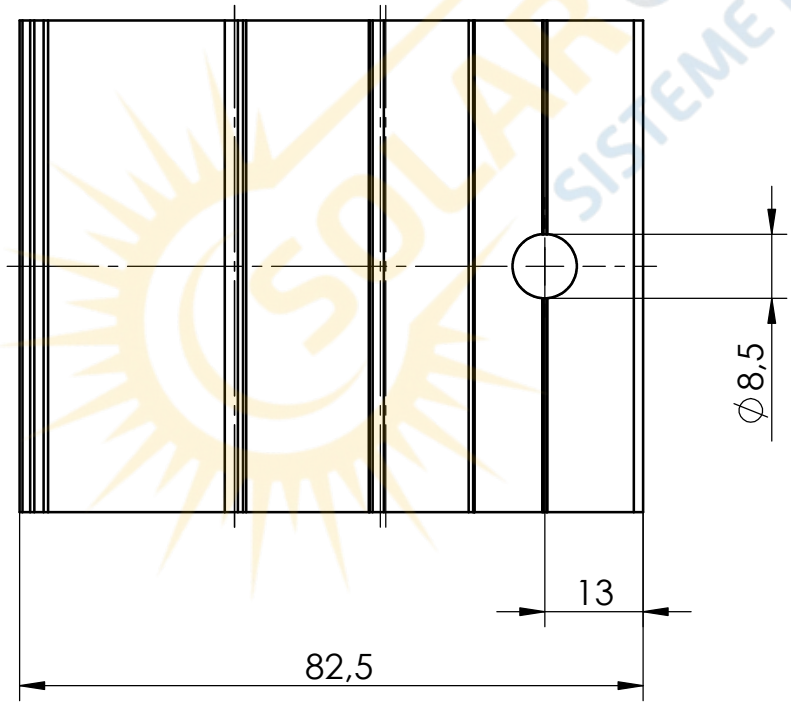

Isometric
1 : 2

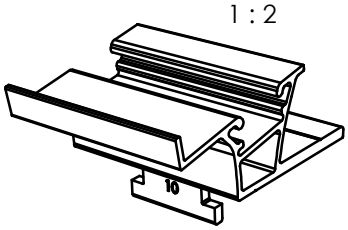

K2 Systems GmbH
Industriestr. 18
71272 Renningen
Germany
+49 7159 42059-0

Designation:

Data sheet Dome 6.10 SD

	Name	Date	Material:	Item no.:	2003243	A4
Designed	E. Markou	20.10.2022	EN AW 6063 T66			
Approved	A. Soumpalas	20.10.2022	Surface: mill finish	Drawing no.:	07-460-05	All dimensions in mm
Last change	E. Markou	20.10.2022	Weight: ca. 84.7 g/pc Scale: 1:1			Sheet 1 of 1

This drawing is the sole property of K2 Systems GmbH. It is protected by copyright and may only be copied, reproduced or distributed to a third party with explicit permission!